SWRHN-62A

Radio Replacement with SWC, Multi-angle Backup & Lane Watch Camera Retention
for Select HONDA ACCORD Vehicles 2016-2017

PRODUCT MANUAL
VER.111926

CONTACT

ADDRESS:

CRUX Interfacing Solutions
21541 Nordhoff St. Unit C,
Chatsworth, CA 91311

PHONE:

(818) 609-9299

E-MAIL:

support@cruxinterfacing.com
sales@cruxinterfacing.com

WEBSITE:

www.cruxinterfacing.com

PRODUCT FEATURES:

- Retains factory features in select Honda vehicles while functioning with an aftermarket radio.
- Pre-programmed to retain factory Steering Wheel Controls.
- Provides navigational outputs: Reverse, Illumination, Parking Brake, Vehicle Speed Sense & Lanewatch Camera Outputs.
- Retains factory Multi-Angle Rear View Camera & Lanewatch Camera
- Includes antenna adapter, USB retention cable, & subwoofer output cable.
- EIA color coded wiring for easy installation.

NOTES:

1. Supports both Amplified & Non-amplified vehicles.
2. Does not retain Rear Seat Entertainment system (RSE).
3. Includes Crux Video Switcher to Lanewatch and rear view camera retention.
4. Type-C updatable firmware.
5. If your vehicle does not have Lanewatch camera, use SWRHN-62AW instead.
6. The factory 8" upper display i-mid screen is not retained.

PARTS INCLUDED:



Module



Harness



SWC Cable



USB Cable



Antenna Adapter 12'

INSTALLATION DIAGRAM FOR AMPLIFIED VEHICLES:

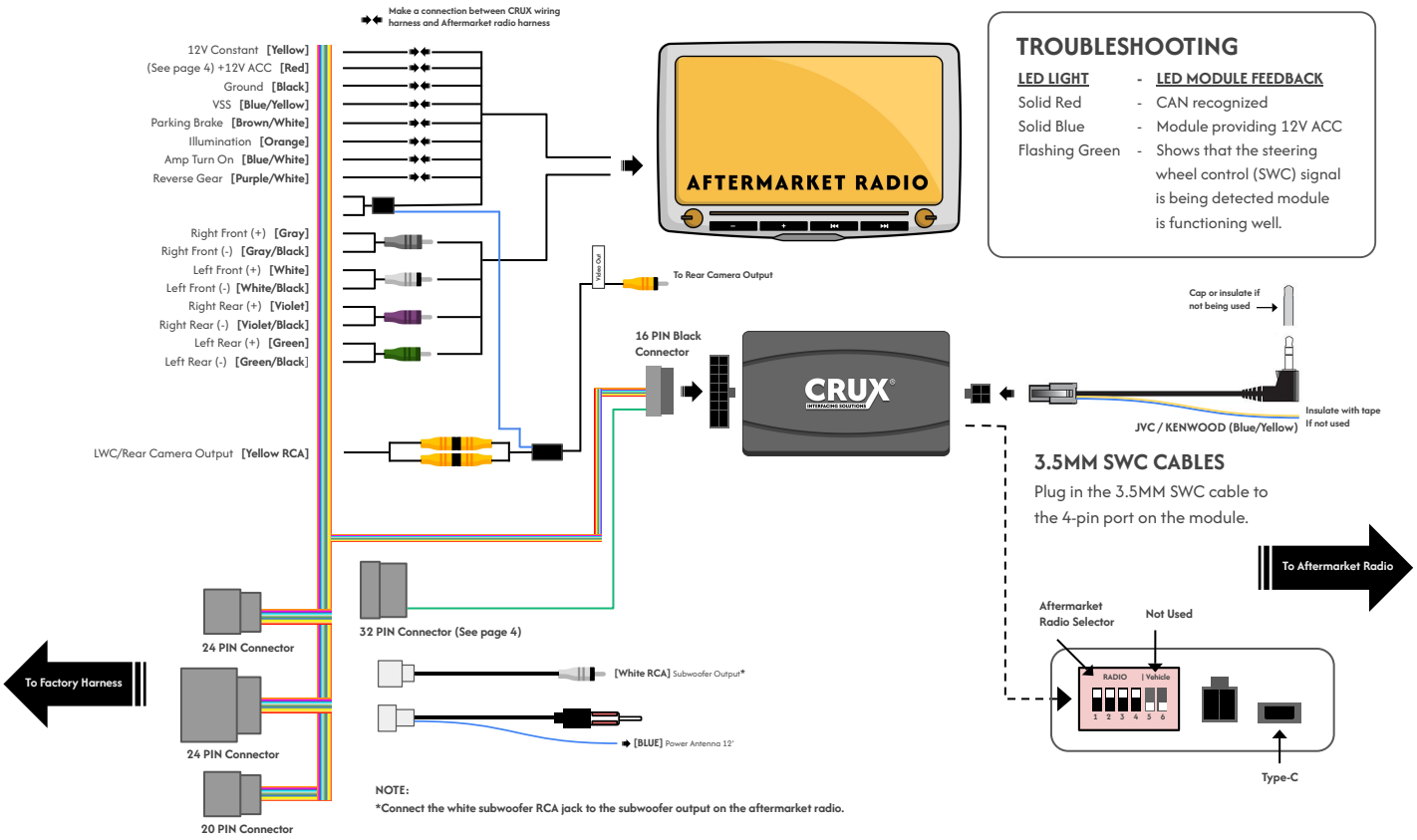

TROUBLESHOOTING

LED LIGHT	-	LED MODULE FEEDBACK
Solid Red	-	CAN recognized
Solid Blue	-	Module providing 12V ACC
Flashing Green	-	Shows that the steering wheel control (SWC) signal is being detected module is functioning well.

INSTALLATION DIAGRAM FOR NON-AMPLIFIED VEHICLES:

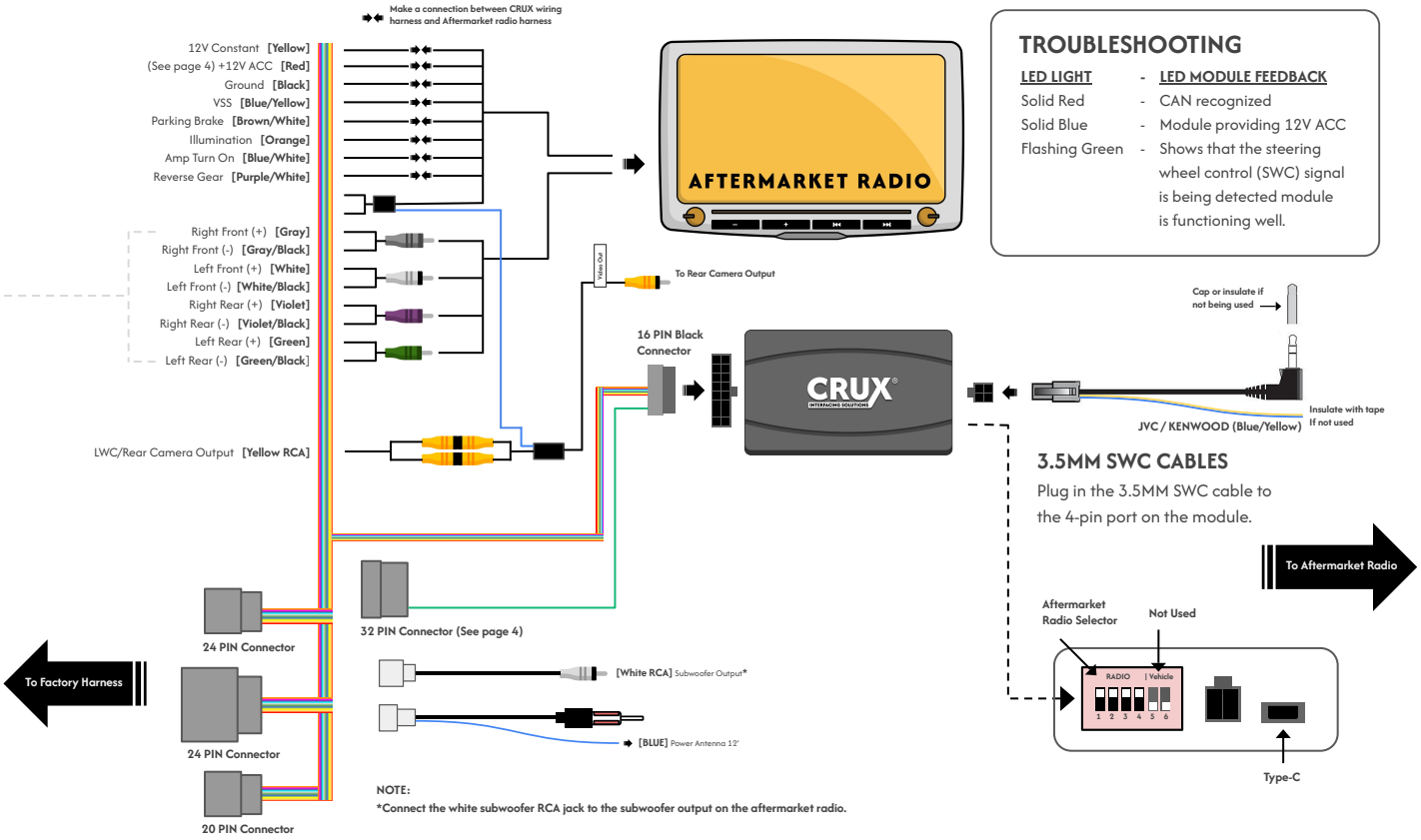

TROUBLESHOOTING

LED LIGHT		LED MODULE FEEDBACK
Solid Red	-	CAN recognized
Solid Blue	-	Module providing 12V ACC
Flashing Green	-	Shows that the steering wheel control (SWC) signal is being detected module is functioning well.

For Non-Amplified systems please cut RCA, and mate colored wires to the appropriate aftermarket radio speaker wires

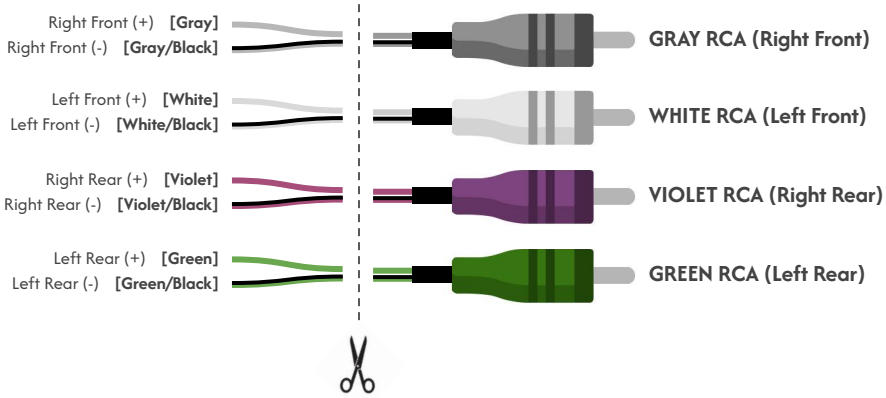

ALTERNATIVE ACCESSORY POWER TROUBLESHOOTING:

*NOTE: If you are experiencing issues with **Accessory Power** from the module, connect the provided alternative power wire to the CRUX connector and then to the aftermarket radio.*

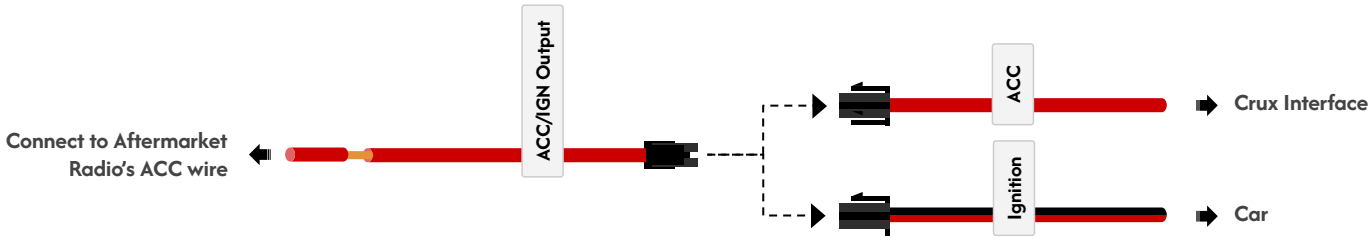

BLUETOOTH BUTTONS RETENTION GUIDE

Locate the HandsFree Link Module using the chart below. Find the 32-pin female connector, disconnect it from the HandsFree Link Module, and connect it to the CRUX 32-pin male connector.

Touchscreen:	With Navigation:	Location:	Connector:
YES	NO	Below factory radio / lower-center dash	32 Pin
YES	YES	Below factory radio / lower-center dash	32 Pin

TROUBLESHOOTING: LOW AUDIO OUTPUT

Some aftermarket head units may have a low RCA output voltage, which can result in low audio output. To compensate for this, we recommend using the **CRUX LOC-1** (not included in the kit) to increase the RCA signal level.

Scan the QR code to access the troubleshooting instructions and High-to-Low Level Converter (LOC-1) connection diagram. The instructions provide the recommended connection method for converting the aftermarket radio's speaker-level output to the appropriate signal for the factory amplified audio system.

Follow the connection instructions if the audio remains low even when the aftermarket radio volume is turned up.

NOTE: LWC SWITCH



Press the Force LWC switch (push button located on the turn signal switch) to manually activate the LWC camera view.

Note: The LWC function will be automatically overridden when the vehicle is shifted into Reverse.

DIP SWITCH SETTINGS:

AFTERMARKET RADIO DIP SWITCH SETTINGS:

RADIO BRAND:	DIP#: 1	2	3	4
Atoto, Dual, Farenheit, Jensen, Nakamichi	OFF	OFF	ON	ON
Pioneer, Power Acoustik, Soundstream	OFF	OFF	ON	ON
Blaupunkt, Most off-brand Radio	OFF	OFF	ON	ON
Alpine	OFF	OFF	OFF	OFF
Clarion	OFF	ON	ON	OFF
Kenwood	OFF	ON	ON	ON
JVC	OFF	ON	OFF	ON
BOSS, Old Sony	OFF	ON	OFF	OFF
New Sony (with CarPlay)	OFF	OFF	ON	OFF
SWC Learning Radios*	ON	OFF	OFF	ON
Boss II **	ON	OFF	ON	OFF
Jensen II **	ON	OFF	ON	ON

NOTE: *For Atoto, Blaupunkt, Dual, Farenheit, Nakamichi, Power Acoustik, Soundstream, and most off-brand radios. Check the aftermarket radio's manual to see if the SWC buttons need to be programmed*
** For SWC Learning Radios specific steps are required. Please scan the QR code on the right.*
*** For Boss II and Jensen II make sure your module's software is updated to 1.3.9*

SWC TROUBLESHOOTING OPTION



Located internally, need to take plastic casing off module

If Steering Wheel Controls don't work or work properly, please switch internal DIP switch from 3v3 to 5v as shown in picture above.

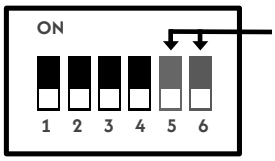

NOTE:
DIP Switches 5-6 are not used

Troubleshooting for SWC Learning Radios

For aftermarket radios that have wires for SWC connections, cut off the 3.5mm plug on the Crux SWC Cable (option B) and connect the SWC wires as follows:



Note that there are some radios that only have SWCl and SWC2, in this case "shield" does not need to be connected.

VEHICLE APPLICATIONS:

YEARS	MAKE	MODEL
2016 - 2017	HONDA	**ACCORD** EX / EX-L / EX-L Navi / Touring *(Vehicles equipped with OEM carplay)*

NOTE:
**Honda Accord 2013-2015 EX/ EX-L/ Touring (Vehicles equipped w/ Display Audio & 24 pin latched connector) will use Crux part number SWRHN-62O.*

**If your vehicle does not have Lanewatch camera, use SWRHN-62AW instead.*



MULTI-ANGLE REAR VIEW CAMERA:



The Crux SWRHN-62A retains the factory Multi-Angle Rearview Camera functionality. Use the **FACTORY SOURCE** button on the steering to switch between the available camera views. Follow steps below.



Place vehicle in reverse for **DEFAULT** camera view.



For wide angle view press **SOURCE** button for 1 second.



For top down camera view press **SOURCE** button for 1 second.